https://doi.org/10.18453/rosdok_id00005953

Compounding of Gossip Graphs

Guillaume Fertin[t], Roger Labahn[t]

[t] LaBRI - U.M.R. CNRS 5800, Universite Bordeaux I,
351 Cours de la Liberation, F-33405 Talence Cedex
fertin@labri.u-bordeaux.fr

[t] Universität Rostock, FB Mathematik, D-18051 Rostock
roger.labahn@mathematik.uni-rostock.de

Abstract

Gossiping refers to the problem of information dissemination described in a group of individuals connected by a communication network, whereby every node has a piece of information and needs to transmit it to all the nodes in the network. The networks are modelled by graphs, where the vertices represent the nodes, and the edges the communication links. In this paper, we concentrate on *Minimum (Linear) Gossip Graphs* of even order, that is graphs able to achieve gossiping in minimum time, and with a minimum number of links. More precisely, we derive upper bounds for their number of edges from a compounding method, the *k-way split method,* previously introduced for broadcasting by Farley [Far79]. We show that this method can be applied to gossiping in some cases, and that this generalizes some compounding methods for gossip graphs given in [Fer97]. We also show that, when applicable, this method gives the best known upper bound on the size of Minimum Gossip Graphs in most cases, either improving or matching them. Notably, we present for the first time two infinite families of Gossip Graphs of respective degree 1log2(n)l - 3 and jlog2(n)l - 4. We also give some lower bounds on the number of edges of Gossip Graphs which improve the ones given in [Fer97].

Moreover, we show that the above compounding method also applies for *Minimum Linear Gossip Graphs* (or *MLGGs)* of even order, which corresponds to a variant of gossiping where the time of information transmission between two nodes depends on the amount of the information exchanged. We also prove that this gives the best known upper bounds for $G_{\beta,T}(n)$ - the size of a *MLGG* of ordern - in most cases. In particular, we derive from this method the exact value of $G_{\beta,T}(72)$, which was previously unknown.

1 Introduction

Gossiping is a problem of information dissemination described in a group of individuals connected by a communication network. In gossiping, every node knows a piece of information and needs to transmit it to everyone else. This is achieved by placing communication calls over the communication lines of the network. Throughout this paper, we will consider a *1-port, full-duplex* model, that is respectively :

- A node can communicate with at most one of its neighbours at any given time, and
- When a communication takes place between two nodes, the information flows in both directions.

Depending on the cases, we will either consider this model to be *unit cost* or *linear cost.* In the former, a communication between two nodes takes one time unit, while in the latter the communication time implies a fixed start-up *ß,* and a propagation time, proportional to the amount of information exchanged. Note that in this case, we suppose that every node holds a unique piece of information that cannot be split, and that all pieces have the same length 1. Moreover, we suppose that when two nodes communicate, each node can send a *message* consisting of one or more pieces of information to the other node.

In both cases (i.e. *unit cost* and *linear cost),* networks will be modelled by undirected graphs, without loops or multiple edges. The vertices will represent the nodes of the network, and the edges the communication links.

Most of the recent interest in gossiping is due to its importance in the area of network communications and other areas of parallel and distributed computing. A way to tackle problems like gossiping is to find interconnection networks with the minimum resources necessary to gossip in minimum time. This approach is the one we are dealing with in the following.

Knödel [Knö75] proved that the time g_n to gossip in the complete graph of order *n,* K_n, under the *constant time* model is :

- $\lfloor \log_2(n) \rfloor$ for even *n,* and
- $\lfloor \log_2(n) \rfloor + 1$ for odd *n.*

A *Gossip Graph* will then denote a graph able to gossip in minimum time. However, it is not necessary to consider the complete graph to get a Gossip Graph. Hence we denote by *Minimum Gossip Graph,* or *MGG,* any Gossip Graph with a minimum number of edges. For a graph of ordern, this number of edges is denoted by *G(n).*

Similarly, in the *linear cost* model, we denote by $g_{ß,\tau}(n)$ the minimum time to gossip in the complete graph K_n. When *n* is even, Fraigniaud and Peters [FP94] have proved that $g_{ß,\tau}(n) = \lfloor \log_2(n) \rfloor ß + (n-1),$. A *Linear Gossip Graph* will denote a graph able to gossip in minimum time, while a *Minimum Linear Gossip Graph,* or *MLGG* is a Linear Gossip Graph with a minimum number of edges. This number is denoted by $G_{ßT}(n)$.

Very few values of G(n) and $G_{ß}$,T(n) are known in the general case. G(n) is determined for n = 2P, n = 2P - 2 and n = 2P - 4 [Lab93], while $G_{ß}$,T(n) is determined for the same values of n, and also n = 2P - 6 [FP94]. The only known specific values of G(n) are for 1 n 16 (except for n = 13), and n = 24 [Fer97], while the only known specific values of $G_{ß}$,T(n) are for even n with 2 n 32 (except for n = 22), n = 42, n = 44 and n = 48 [FP94].

Determining precisely the values of G(n) and $G_{ß}$,T(n) is known to be a hard problem. In this paper, we focus on a general way to get upper bounds for G(n) and $G_{ß}$,T(n). This can be dorre either by exhibiting some families of graphs which are known to be (Linear) Gossip Graphs for any *n,* like Knödel graphs (cf. [Fer97]), or by constructing (Linear) Gossip Graphs from existing (Minimum) (Linear) Gossip Graphs. We will concentrate mostly on the second method in this paper.

Section 2 will first focus on the *unit cost* model. In Section 2.1.1, we will present a general compounding method very close to the *k-way split method.* The *k-way split method* was first introduced by Farley [Far79] *to* get upper bounds on the size of Minimum Broadcast Graphs. lt has been extended and improved in [CL85] and [BFP95]. Surprisingly, no comparable study has been undertaken concerning gossiping. We will show that this general compounding method applies in some cases for gossiping. We will also derive from the general method some variants which apply for $k = 3$, $k = 5$, $k = 9$ and $k = 10$. These results lead to prove for the first time the existence of two infinite families of Gossip Graphs of degree respectively $\lfloor \log_2(n) \rfloor - 3$ and $\lfloor \log_2(n) \rfloor - 4$. A summary of these general results in the *unit cost model,* for even 18 n 128, is given in Section 2.1.2.
In Section 2.2, we will focus on new lower bounds for G(n), both in the even and odd case. These bounds improve, when applicable, the lower bounds given in [Fer97].

Next, we will focus on the *linear cost* model, where in Section 3.1 we will see that the general compounding method from the *unit cost* model also applies. Notably, we show that it allows to determine Gß,T(72). Moreover, the infinite family of Gossip Graphs of degree $\lfloor \log_2(n) \rfloor - 3$ given in Section 2 in the *unit cost* model, appears to be a family of Linear Gossip Graphs too. Finally, we give a general upper bound for $G_{ß}$,T(n) which applies for all even *n,* and implies the use of Knödel graphs. Section 3.2 gives a summary of these general results in the *linear cost* model for even 18 n 128.

2 The Unit Cast Model

In this Section, we will present a compouding method to get upper bounds on G(n), then some improvements on the lower bounds for G(n). First, we give a general upper bound, corresponding to a general compounding method. Next, we give some particular methods which are variants of the general one. Finally, Section 2.2 will be devoted to lower bounds on G(n).

2.1 Upper bounds for $G(n)$

2.1.1 Compounding of Gossip Graphs

The method of compounding graphs has been extensively, and is still used for determining upper bounds on the size of Minimum Broadcast Graphs. However, compounding has never been studied in terms of gossiping. Fertin [Fer97] gave some specific compounding methods in order to get upper bounds for $G(n)$. These have been used as a starting point for our work, the idea then being to find a generalization of the methods exposed in [Fer97]. We soon realized that the underlying idea was no other than the one given by Farley [Far79] concerning Minimum Broadcast Graphs. However, some parts of the method do not apply for gossiping. Conversely, we can sometimes split our graph into non-equal parts, something which gives, when applicable, even better results than the general method.

Before introducing the method itself, we need to give the following definition.

Definition 1 (Compoundable Graph) *A* compoundable *gossip graph G of order n is a gossip graph such that there exists a gossip scheme S_u for G having the following property : there exists a perfect matching with respect to the gossip scheme, PMs_0, such that all the edges of $PMsa$ are used during the same fixed round r, and during no other round $r' \neq r$.*

Theorem 1 (Compounding in the Unit Cost Model) *For all k and even n such that there exists a compoundable MGG_{2k} and that* $\lfloor \log_2(nk) \rfloor = \lfloor \log_2(n) \rfloor + \lfloor \log_2(k) \rfloor$, *$G(nk) \leq kG(n) + \frac{1}{2}(G(2k) - k)$.*

Proof: Suppose we have a compoundable MGG of order 2k, G. Take the gossip scheme Sc and a perfect matching PM_{50} such that each edge of PM_{50} is used in only one round r. The idea here is to "replace" each edge u_iv_i of $PMsa$, as well as the vertices u_i and v_i, by a copy of an MGG_n, G_i, and each edge u_iv_j ($i \neq j$) of PM_{50} by a perfect matching between $\frac{1}{2}$ vertices of G_i and as many vertices of G_j. For this, identify $\frac{1}{2}$ vertices of a G_i to vertex u_i, and the remaining $\frac{1}{2}$ vertices to vertex v_i. This gives us a graph with $kG(n) + \frac{1}{2}(G(2k) - k)$ edges. Figure 1 gives an example of such a construction where $k = 3$. The left figure shows an MGG_6 and a (compoundable) gossip scheme. The right figure shows the compounding method associated to this gossip scheme.

Now let us show this is also a Gossip Graph. For this, let the gossip scheme be the following : let the vertices communicate at rounds $1, 2 \ldots (r-1)$ as in Sc. Then from rounds r to $r + g_n - 1$, let each of the k MGG_n gossip independently. Finally, from round $r + g_n$ to round $g_{nk} = g_n + g_k$, let the gossip scheme be the same as in Sc, except that the rounds take place g_n time units later. This is a valid gossip scheme, thanks to the "compoundability" of the MGG_{2k}, and thanks to the constraint $g_{nk} = g_n + g_k$. The former allows us to see each of the MGG_ns as a black box (where the unique round used to communicate along the edge u_iv_i now takes g_n rounds, after which all the vertices of the MGG_n are informed), while the latter shows that the gossip takes place in minimum time. Moreover, this scheme respects the 1-port constraint which implies that one vertex cannot

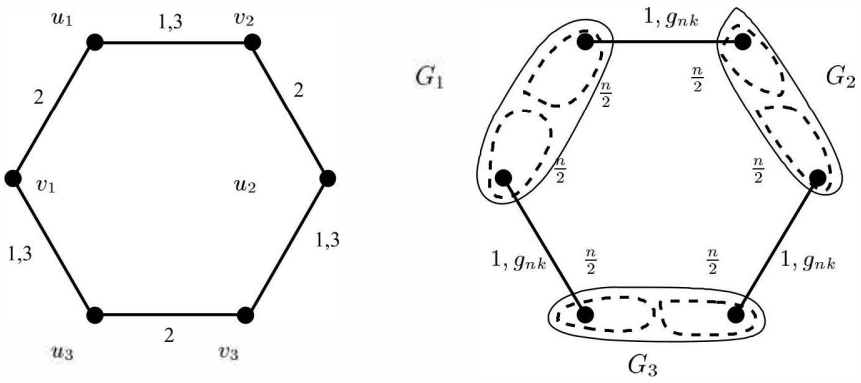

Figure 1: A MGG_6 (left) and a Compounding (right)

communicate to two or more different neighbours, since n > 1.

Following the gossip scheme above, one can see that each vertex of the new graph constructed is able to broadcast its own information to all the other vertices in the graph in minimum time. Moreover, since the gossip scheme is valid, the broadcast of each vertex can be dorre in parallel, which shows that gossiping is achieved in minimum time.

For some particular cases, the structure of the MGG_{2k} on which we build our compounding is of extreme importance. Indeed, in some cases it is not necessary to take k copies of a MGG_n : we can use MGGs of different orders. Propositions 1 to 5 are based on this particular method.

Proposition 1 (3-way split method) For all even n_1, n_2 and n_3 such that $\lfloor \log_2(n_1 + n_2 + n_3) \rfloor = 2 + \lfloor \log_2(n_j) \rfloor$ 'ij E {1, 2, 3}, $G(n1 + n_2 + n_3) \leq G(ni) + G(n_2) + G(n3) + \frac{1}{2}.(n_1 + n_2 + n3)$.

Proof : Note that if we consider $n_1 = n_2 = n_3 = n$, we get the formula of Theorem 1 in the case k = 3. Note also that this Proposition is a generalization of a compounding method given in [Fer97], where we had $n_1 = n_3$. Here, we show that we can take three MGGs of distinct orders. In that case, k = 3, that is the MGG_{2k} is the cycle of order 6, C_6. Hence the perfect matching we will use is necessarily the one where the edges are used at round 2. However, if instead of taking 3 copies of a MGG_n, we take a MGG_nu a MGG_{n_2} and a MGG_{n_3}. we show that we still can get a Gossip Graph. Suppose, w.l.o.g., that $n_1 \leq n_2 \leq n_3$. Let $a = \frac{ni+n_2-n^3}{2}$; a is a strictly positive integer since every ni is even, and since $n_1 \leq n_2 \leq n3 > 0$. The idea here is to match a vertices among the n_1 of the MGG_{n_1} with as many in the MGG_{n_2} as shown in Figure 2. Note that this is possible since $0 < a < n_2 \leq n_1$: indeed, if $a = n_2$, that would mean $n_1 \leq n_2 + n_3 \leq 2n_3$, which would imply $\lfloor \log_2(ni) \rfloor > \lfloor \log_2(n_3) \rfloor$, and would thus violate the condition $\lfloor \log_2(n_1 + n_2 + n_3) \rfloor = 2 + \lfloor \log_2(n_j) \rfloor$ 'ij E {1, 2, 3}.

Now there remains n_1 - a vertices from the MGG_{n_1} to match with as many in n_3. Hence

we must have n_3 - nl + $a = n_2$ - a, which is true by definition of a, and nl - $a < n_3$. But if we suppose nl - a n_3, we would have nl $n_2 + n_3$ ♦ $2n_3$, and we have seen that this cannot occur.

Since the copies of MGG_n; do behave as black boxes as far as gossiping is concerned, and since we have $9_n i+_{n_2}+_{n_3} = 9_n$; + 2 Vi E {1, 2, 3}, we still have the property that the whole graph constructed this way is a Gossip Graph on nl + n_2 + n_3 vertices. □

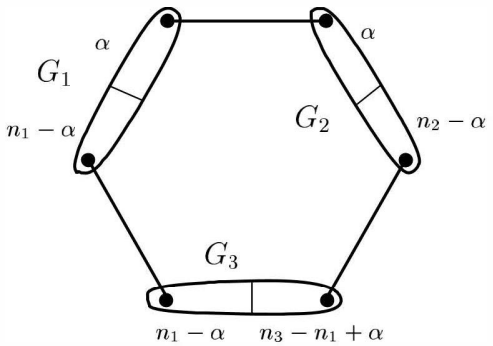

Figure 2: Compounding using C_6

Proposition 2 (5-way split method)

- *For all even* nl *and* n_2 *such that* 1$\log_2(4n1 + n_2)$1 = 3 + $\lceil \log_2(n_j) \rceil$ $\forall j \in \{1, 2\}$, G(4n1 + n_2) ::; 4G(n1) + G(n_2) + 2nl + $2n_2$.
- *For all even n such that* 1$\log_2$(5n)1 = 3 + j$\log_2$(n)l, G(5n)::; *3G(n)* + 4G( ) + *5n.*

Proof: The first formula of the Proposition derives from a similar argument as in Proposition 1. This is dorre using the MGG_{10} shown in Figure 3 (left). Here, we want to replace each edge of the perfect matching corresponding to round 2 by a copy of a MGG_n;, *Gi,* where the *ni* (1 ::; i ::; 5) may be pairwise distinct. This is shown in Figure 3 (right). In that case, if we suppose a vertices of G_1 are matched with as many in G_5, we necessarily get the right figure of Figure 3, with ß = n_1 - a. Standard calculations show that we necessarily get the following equalities :

- $n_1 = n_2 = n_4 = n_5$ and
- $2\alpha = n_3$.

Note also that if $n_1 = n_2 = n$, we get the formula of Theorem 1.

The second formula of the Proposition relies on a slightly different idea. Suppose that some edges are used during a unique round *r,* but these edges do not form a perfect

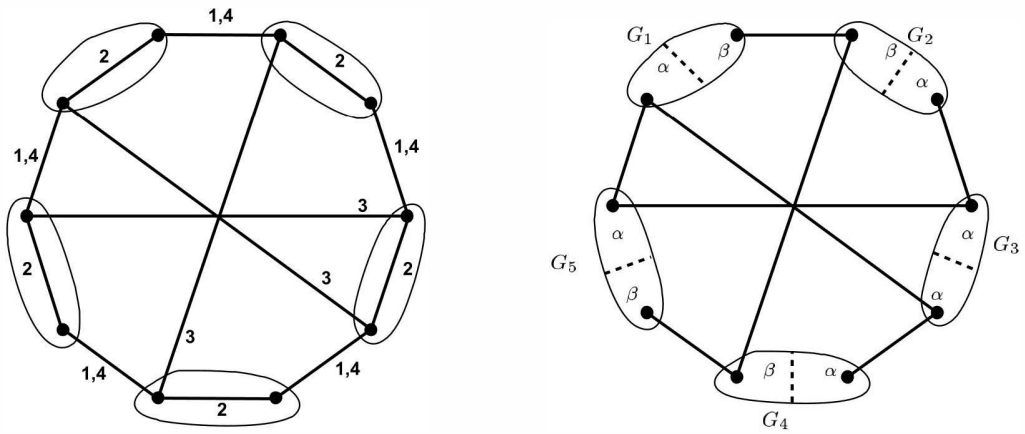

Figure 3: A MGG_{10} (left) and a compounding method using it (right)

matching. In that case, we can still use the same compounding method, but one has to see the "isolated" vertices (that is, vertices which do not communicate at round *r)* as a contracted edge. Hence we replace any isolated vertex by a copy of a $MGG_{\frac{n}{2}}$, while the edges used in round r are replaced, as before, by a copy of a MGG_n. Then, each edge between an isolated vertex and a non-isolated one will be replaced by a perfect matching between to sets of vertices, and an edge between two non-isolated vertices will be replaced, as previously, by a perfect matching between two sets of vertices as well.

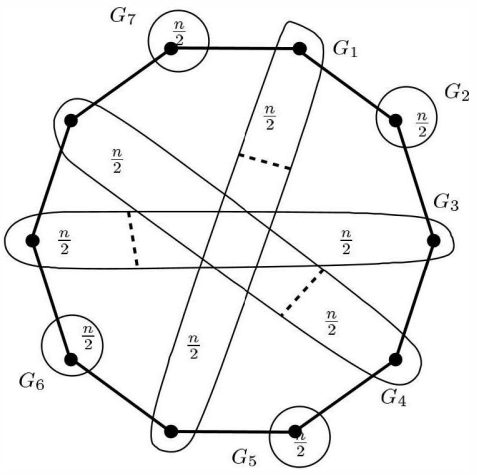

Figure 4: Another compounding using a MGG_{10}

In the case where we start from a MGG_{10}, we apply this method with the round $r = 3$, and the method is then shown in Figure 4. The same arguments as in the Proof of Theorem 1 show that the graph constructed that way is a Gossip Graph. Note, though, that we need to have $9!!j :S;9_n$, in order to be able to gossip in any $MGG_{\%}$ at worse in the

same time as in any copy of a MGG_n. However, we know by definition of 9_n that 9!!] ::; 9_n V *n*, even when ? is odd. □

Using the same construction as in the second part of Proposition 2, and relying on the structure and gossip scheme of the Gossip Graph of order 18 displayed in Figure 5, we can show the following Proposition.

Proposition 3 (9-way **split method)** *For all even n such that* $1\log_2(9n)l = 4 + j\log_2(n)l$, G(9n)::; *7G(n)* + 4Grn) + *9n.*

Proof : The proof relies exactly on the same construction and arguments as in the second part of Proposition 2. The method is displayed in Figure 5 (left and right). Note that, as previously, we need 9!!] ::; 9_n ; but this is always the case, even when ? is odd.

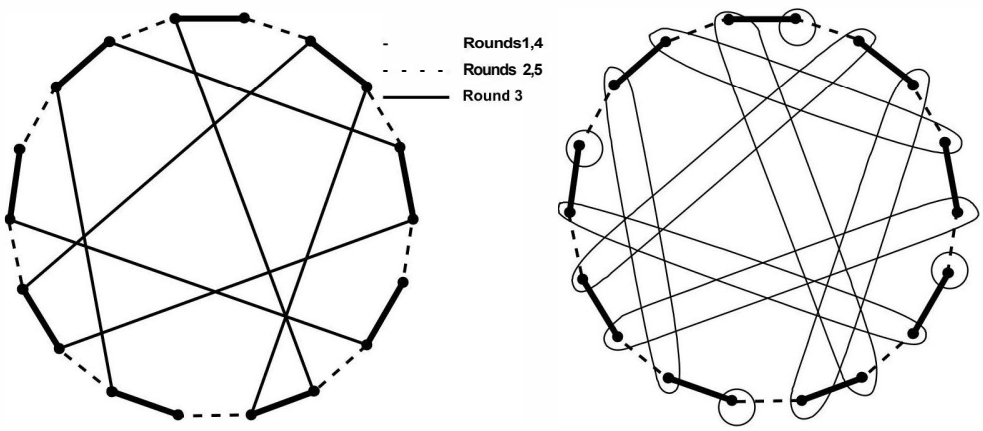

Figure 5: A *Gossip Graph* of order 18 (left) - The compounding method (right)

Proposition 4 (10-way **split method)** *For all even* n_1, n_2 *and n3, let* a = ½· (n_1 + n_2 - *n3), and* ß = ½•(n1 - n2 + *n3). Then if:*

- $j\log_2(6n1 + 2n2 + 2n3)l = 4 + j\log_2(nj)l$ Vj E {1, 2, 3} ;
- 9_a ::; 9_{n_l} Vj E {1, 2, 3} ;
- 9ß ::; 9_{n_l} Vj E {1, 2, 3},

G(6n1 + $2n_2$ + 2n3) ::; 4G(ni) + 2G(n_2) + 2G(n3) + 2G(a) + 2G(ß) + 6n1 + 2n2 + 2n3.

Proof : The method here is similar to the ones given above. Its particularity is that it mixes the two variants of the general method, that is : the matching we use here is not a perfect matching, and we decide to assign to each isolated vertex (resp. each edge of the matching) a copy of a MGG_n;, where the ***ni*** may differ.

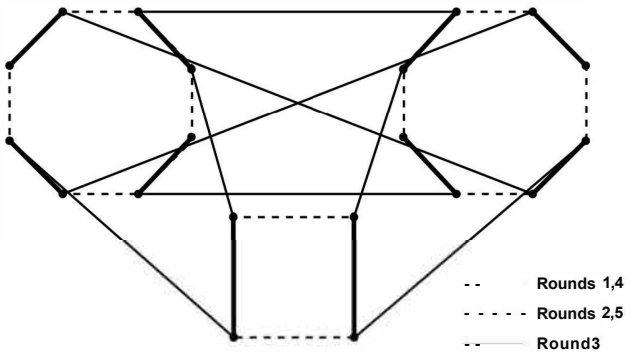

Figure 6: A Gossip Graph of order 20 and a gossip scheme

Let us take the Gossip Graph of order 20 and a gossip scheme shown in Figure 6 (note that this graph has been shown to be a Gossip Graph by [Pah97]). Let us then use the matching given by the edges used in round 3. Note that this is not a perfect matching. Replace each of these edges by a *MGG,* and each of the isolated vertex by a copy of a *MGG,* where the order of these *MGGs* may differ. Now we refer to Figure 7 and state the following : suppose that we decide to match α vertices of G_1 with as many in G_2. In that case, it is easy to see that each matching in the "upper leftmost" cycle will be of size α. Let ß = n_1 - α. Then each matching of the "upper rightmost" cycle will be of size ß. The same occurs for the "lower" cycle, where each matching will be of size $_1$. Thanks to the constraints on the size of these matchings, we obtain equalities between α (resp. ß, $_1$) and the nis, where *ni* = IGil for 1 ::; i ::; 3. Standard calculations then give us the result. D

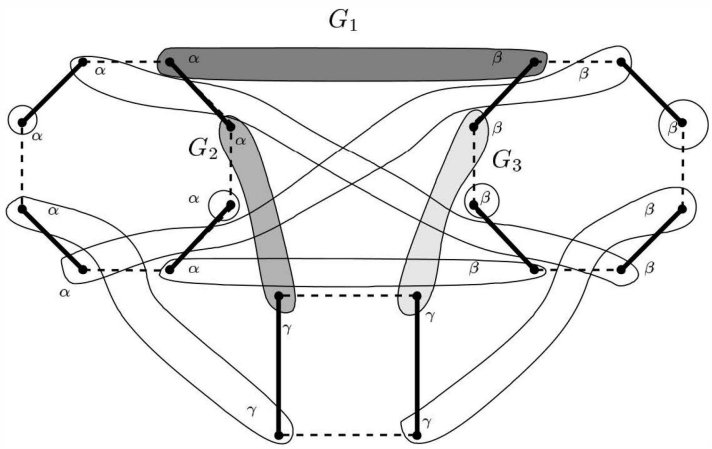

Figure 7: Compounding using the Gossip Graph of Figure 6

Proposition 5 (12-way split method) *For all even* n1, n_2 *and* n3 *such that* 1log$_2$(4n1+ 4n_2 + 4n3)l = 4 + jlog$_2$(nj)l *Vj* E {1, 2, 3}, G(4n1 + 4n_2 + 4n3) ::; 4 • (G(n1) + G(n_2) + G(n3)) + 4 • (n1 + n2 + n3).

Proof : This relies on the same arguments as, for instance, the proof of Proposition 1. Here, the perfect matching we use is the one given by edges used in round 3 (cf. for this Figure 8 (left), which shows a MGG$_{24}$ and a gossip scheme). In that case, if we replace each edge of the perfect matching by a MGG_{n_i}, *Gi*, where the *ni* may differ, and if we partition the set of vertices of G$_1$ and G$_2$ as shown in Figure 8 (right), we get the following equalities, where *ni* = IG$_i$l for all 1 ::; i::; 12 :

- $n_1 = n_6 = n_8 = n_{12} = \alpha + \beta$;
- $n_2 = n_5 = n_9 = n_{11} = \beta + \gamma$;
- $n_3 = n_4 = n_7 = n_{10} = \alpha + \gamma$;

This leads directly to the result. □

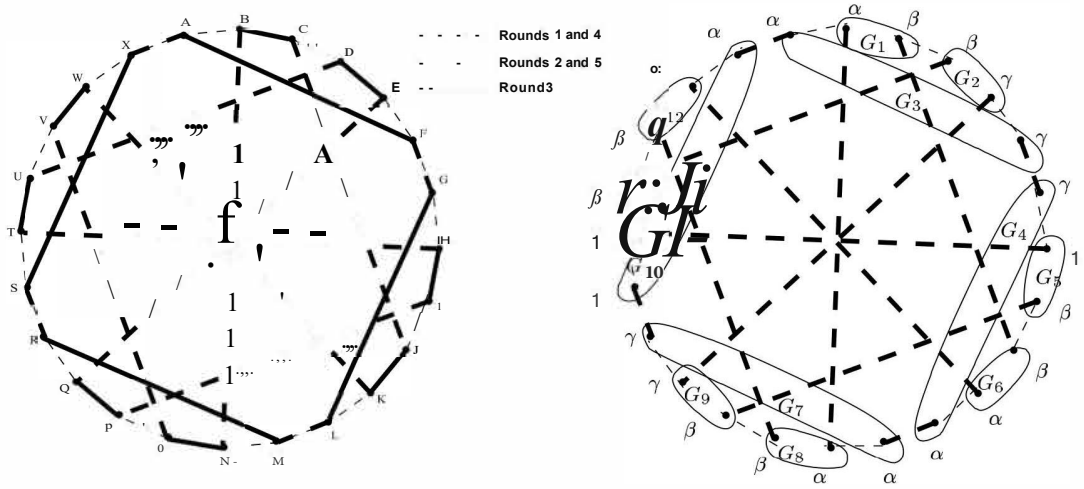

Figure 8: A MGG$_{24}$ and gossip scheme (left) - The compounding method (right)

Thanks to Theorem 1 and Propositions 1 to 5, we prove for the first time that there exists Gossip Graphs with · (jlog$_2$(n)l - 3) edges, but also Gossip Graphs with · (jlog$_2$(n)l - 4) edges, for infinitely many values of *n*. Indeed, we have the following Propositions.

Proposition 6 *For all p* 7 *and n′* = 24 • (2P-^{5} - 1), *G(n′)* ::; n′(−3).

Proof : Suppose *n′* = 24 · (2P-^{5} - 1) with *p* 7. Then $g_{n'} = p$. In that case, let us apply Theorem 4 where *k* = 2p-^{5} - 1, and n = 24. We know this is possible since there

exists compoundable gossip graphs of order 2k (cf. for instance [Lab93]). We then have $G(n') \leq k \cdot G(24) + \frac{G(2)-k}{} \cdot 24$. Since we know $G(2k) = G(2^p - 4 - 2) = (p - 5) \cdot k$ and $G(24) = 36$, we have $G(n') \leq 36 \cdot k + k(p;^{6}) \cdot 24$, that is $G(n') \leq \frac{24k}{}(\frac{-3}{})$, where $n' = 24k$. Hence the result.

It is interesting to note also that there exists an infinity of (p-4)-regular Gossip Graphs. For this, take $n' = 576 = 24 \cdot 24$. In that case, let us apply Theorem 1 where $n = k = 24$. For this, we need to make sure that there exists a compoundable gossip graph of order 48 : we then use the 2-way split method to obtain a gossip graph of order 48 such that the perfect matching between the two copies of a MGG_{24} are used in a single round (the first round, for instance). Hence we get a compoundable gossip graph with $2k = 48$ vertices and 96 edges. Standard calculations then give $G(n') \leq 3n'$, that is a 6-regular graph where $9_n' = 10$. Starting from this graph, and using the compounding method where $k = 2$, we have the following Proposition.

Proposition 7 *For all p* 10 *and* $n' = 576 \cdot 2^{p-10}$, $G(n') \leq$ n'(-4).

2.1.2 Summary of the Upper Bounds Results (Unit Cost)

Table 1 presents the results given by the k-way split method for even n with $18 \leq n \leq 128$. Note that for the values $n = 2^p$, $n = 2^p - 2$ and $n = 2^p - 4$, we know by [Lab93] that the result is optimal. For $n = 2^p$, $G(n) = P;$, and for $n = 2^p - 2$ and $n = 2^p - 4$, $G(n) =$ (p-2l)n. Note also that $G(24) = 36$ is known to be optimal by [Fer97]. The optimality for $G(n)$ is indicated by an asterisk (*)-

The "Comments" column indicates how these bounds have been obtained, and the "Formerly" column indicates the previously known upper bounds on $G(n)$, taken from the results of [Fer97].

The Gossip Graphs obtained in [Pah97] give better upper bounds than our k-way split method for n = 18, 20 and 22. In particular, these graphs serve as a base for our method, which also helps to improve the following values of n.

Note finally that from these upper bounds for even n can be derived upper bounds for odd n, thanks to techniques given in [Fer97]. Notably, for all even n and odd k such that $2^p - k < n \leq 2^p$, we have $G(n + k) \leq G(n) + k$.

In order to understand completely Table 1, it is necessary to introduce the family of Knödel graphs $W_{\beta,n}$, which appear to be Gossip Graphs in many cases.

Definition 2 (Knödel graph) *The* Knödel graph *{FP94} on n* 2 *vertices (n even) and of maximum degree* $1 \leq \beta \leq \lfloor \log_2(n) \rfloor$ *is denoted* $W_{\beta,n}$. *The vertices of* $W_{\beta,n}$ *are the pairs* (i,j) *with* $i=1,2$ *and* 0:::; j::::; ? - 1. *For every j,* 0:::; j::::; ? - 1, *there is an edge between vertex* (1, j) *and every vertex* $(2, j + 2^k - 1 \bmod \%)$, *for* $k = 0, \ldots, \beta - 1$.

For $0 \leq k \leq \beta - 1$, an edge of $W_{\beta,n}$ which connects a vertex (1, j) to the vertex $(2, j + 2^k - 1 \bmod ?)$ is said to be *in dimension k*.

From [Fer97], we get the following Proposition.

Proposition 8 ([Fer97]) *For all even n not a power of 2, we have :*

- $W_{n,p-2}$ *is a Gossip Graph for any* $2p-1+2 \leq n \leq 3 \cdot 2^{p-2} - 4$,
- $W_{n,p-1}$ *is a Gossip Graph for any* $3 \cdot 2^{p-2} - 2 \leq n \leq 2^p - 2$.

n	$G(n) \leq$	Formerly	Comments	n	$G(n) \leq$	Formerly	Comments
18	25	27	[Pah97]	74	161	185	3-way [26-24-22]
20	28	30	[Pah97]	76	170	190	3-way [30-24-22]
22	36	41	[Pah97]	78	171	195	3-way [30-24-24]
24	36*	36*	[Fer97]	80	176	200	12-way [8-6-6]
26	52	52	$w_{4,26}$	82	197	205	3-way [30-30-22]
28	56*	56*	[Fer97]	84	198	210	3-way [30-30-24]
30	60*	60*	[Lab93]	86	215	215	3-way [30-30-26] $w_{5,86}$
32	80*	80*	[Lab93]	88	208	220	12-way [8-8-6]
34	64	66	3-way [14-10-10]	90	225	225	$w_{5,90}$
36	68	68	2-way [18-18]	92	230	230	$W_{5,92}$
38	74	74	3-way [14-14-10]	94	267	282	3-way [32-32-30]
40	76	76	2-way [20-20]	96	240	240	2-way [48-48]
42	84	84	3-way [14-14-14] $w_{4,42}$	98	294	294	$w_{6,98}$
44	88	88	$w_{4,44}$	100	300	300	$w_{6,100}$
46	108	108	3-way [16-16-14]	102	306	306	$w_{6,102}$
48	96	96	2-way [24-24]	104	312	312	$w_{6,104}$
50	125	125	$w_{5,50}$	106	318	318	$w_{6,106}$
52	130	130	$W_{5,52}$	108	324	324	$w_{6,108}$
54	135	135	$w_{5,54}$	110	330	330	$w_{6,110}$
56	140	140	$w_{5,56}$	112	336	336	$w_{6,112}$
58	145	145	$w_{5,58}$	114	342	342	$w_{6,114}$
60	150*	150*	[Lab93]	116	348	348	$w_{6,116}$
62	155*	155*	[Lab93]	118	354	354	$w_{6,118}$
64	192*	192*	[Lab93]	120	360	360	$w_{6,120}$
66	130	165	3-way [24-24-18]	122	366	366	$w_{6,122}$
68	134	170	3-way [24-24-20]	124	372*	372*	[Lab93]
70	143	175	3-way [24-24-22]	126	378*	378*	[Lab93]
72	144	180	3-way [24-24-24]	128	448*	448*	[Lab93]

Table 1: Upper bounds for $G(n)$ ($18 \leq n \leq 128$)

2.2 Lower Bounds for the Unit Cost Model

Lower bounds for $G(n)$ in the *unit cost* model have been previously studied in [Lab93, Fer97] where the techniques used rely on the analysis of the structure of an MGG_n, and mostly on the degrees of its vertices. In this Section, following the techniques of [Fer97], some improvements on these lower bounds are given. Before presenting these new results, we need to introduce the following notation : an edge $uv \in E$ is called a $(1, d)$ *edge* iff $\deg u = 1$ and $\deg v = d$.

Note also that in the following, we will abbreviate $p := \lfloor \log_2 n \rfloor$, i.e. n (the number of vertices considered) is as follows: $2^{p-1} + 1 \leq n \leq 2^p$. Then, $9_n = p$ if n is even, and $9_n = p + 1$ if n is odd.

Provided that we know certain rounds during which a fixed root v communicates with its neighbours, the first standard argument in the following lower bound proofs is to estimate the maximum number of vertices which eventually can receive v's item : any neighbour u of v learns this news during the first round, i, the edge vu is used in. From u, it can then be broadcasted to at most $2^{9_n - i}$ vertices (including u itself) during the remaining 9_n - i rounds. But every usage of vu in a later round $j > i$ prevents u from passing v's item to a yet uninformed neighbour which results in losing $2^{9_n - j}$ vertices from the above amount. Thus, if vu is used during the rounds $i < j_1, j_2, \ldots, j_l$, v's item can reach via u at most

$$mbt_{9_n}(j_1, j_2, \ldots, j_l) 2^{9_n - i} - \sum_{k=1}^{l} 2^{9_n - j_k}$$

vertices including v itself. Summation over all edges incident to v yields the following general estimate:

Proposition 9 *Let R^+ include the set of all rounds when an edge incident to a fixed root v is used first, and let R^- be contained in the set of all remaining, i.e. non-first usages of those edges. Then, including v itself, the number of vertices finally knowing v's item of information after 9_n rounds cannot exceed*

$$mbt_{g_n}(t_1 \in R^+, t_2 \in R^-) := 1 + \sum_{t \in R^+} 2^{9_n - t} - \sum_{t \in R^-} 2^{9_n - t}.$$

Our notation refers to the notion of *minimum broadcast trees* [Fer97] because the above maximum can be attained by broadcasting along a suitable tree rooted in v, as well as the positive or negative contribution of the rounds listed in the argument with or without bar, respectively. The subscript 9_n refers to the total number of rounds available and might be omitted if there is no <langer of ambiguity. Very often we will consider consecutive rounds beginning in round r until round s, where sums of the form $\sum_{t=r}^{s} 2^{9_n - t} = 2^{9_n - r + 1} - 2^{9_n - s}$ appear frequently.

The second standard argument uses that the *inverse* of a given scheme, obtained by replacing each label $t = 1, \ldots, 9_n$ by $9_n + 1 - t$, still provides complete gossiping. Or equivalently, one considers the process of accumulating all items in the vertex v instead of

broadcasting v's item as above. Thus, having proved a statement about round t (usually 1, 2, 3), this method yields an analog statement about round $9_n + 1 - t$ (usually $9_n, 9_n - 1, 9_n - 2$, respectively).

As an illustration, we recall the well-known

Proposition 10

(a) For all even n, every vertex has to communicate during rounds 1 *and* 9_n.

(b) For all odd $n > 2p\text{-}1 + 1$, *every vertex of degree 1 has to communicate during rounds* 1 *and* 9_n.

Proof: Assume, there is a vertex v (of degree 1 in (b)) using at most rounds $2, \ldots, 9_n$ for calling its neighbours. Then by Proposition 9, the number of vertices finally knowing the corresponding item cannot exceed

(a) $mbt_p(2, \ldots, 9_n) = 1 + 2P+^{1-2} - 2P\text{-}P = 2p\text{-}1 < n;$

(b) $mbt(2) = 1 + 2P+^{1-2} = 2p\text{-}1 + 1 < n.$

Because this would contradict the completeness of the entire information exchange, v has to use round 1 also. Considering the accumulation process or the inverse scheme, we know that it also has to be active during round 9_n.

Theorem 2 *For all even n with* $2P - 3 \cdot 2^{p-d} \leq n \leq 2P$, $d \geq 3$, $p \geq 6$, $p \geq d+2$, *it holds* $G(n) \geq t$

Proof: Recall that in this case, $9_n = p$. By Proposition 9, we know that from a vertex of degree at most $d - 2$ one can reach at most $2p\text{-}t = 2P - 4 \cdot 2^{p-d} < n$ vertices, and thus for all vertices v, $\deg v \geq d - 1$. Now, let us consider all edges used in round 1, which - thanks to the 1-port model and Proposition lü(a) - forma perfect matching. Either both incident vertices of such an edge have degree at least d, or if otherwise one has degree $d - 1$ only, the idea is to show that the other one must have degree at least $d + 1$. Thus, the average degree is at least d, i.e. the graph contains at least $\frac{1}{2}\sum_{v \in V} \deg v \geq nd$ edges - as asserted.

For the rest of the proof, let v be any vertex of degree $d - 1$, and similar to Proposition 9, let R^+ be the set of all rounds when an edge incident to v is used first, and let R^- be the set of all remaining, i.e. non-first usages of those edges. Assume that there is a round $i \in \{1, \ldots, d-1\}$ not belonging to R^+. Then v's item of information can be communicated to at most

$$mbt_p(1, \ldots, /, \ldots, d) = 1 + 2P - 2p\text{-}i - 2^{p-d}$$

vertices. This must be at least n which is still possible, but only in the case $i = d - 1$, $n = 2P - 3 \cdot 2P\text{-}d$, $R^+ = \{1, \ldots, d - 2, d\}$. Then, considering the accumulation process, we analogously get that v must use the rounds $p, p - 1, \ldots, P - d + 3$, and at least one of

$p - d + 2$ or $p - d + 1$. If $d \geq 4$ this includes the rounds p and $p-1$ which cannot belang to R^+ since $p - 1 \geq d + 1$, i.e. $R^- \supseteq \{p, p-1\}$. If $d = 3$, then the above, or $R^- \supseteq \{p, p-2\}$ because $p - 2 = 4$. In both cases, v's item cannot reach more than

$$mbt_p(1, \ldots, d-2, d, \overline{p}, \overline{p-1}) = 1 + 2^p - 3 \cdot 2^{p-d} - (2^0 + 2^1) < n$$

vertices. This is a contradiction, and we thus know that v must use its adjacent edges during all the rounds $1, \ldots, d-1$, and for accumulating all items, also during the rounds $p, \ldots, p-d+2$. Hence, $R^+ = \{1, \ldots, d-1\}$, and $R^- \supseteq \{p, p-1, p-2\}$ because $p-2 \geq d$. Assume now finally that during round 1, v would communicate with a vertex u of degree at most d. Its item could then be disseminated to at most $mbt_p(2, \ldots, d)$ vertices via u, and to at most $mbt_p(2, \ldots, d-1, p, \overline{p-1})$ vertices via the other neighbours because at least two of $\{p, p-1, p-2\}$ cannot belang to the edge vu. But this adds up to only

$$1 + 2p\text{-}1 - 2p\text{-}d + 1 + 2p\text{-}1 - 2p\text{-}d+1 - (2^0 + 2^1) = 2P - 3 \cdot 2p\text{-}d - 1 < n,$$

i.e. our final assumption was wrong, and deg u = d + 1 is proved. □

The next results deal with any MGG_n for odd n, i.e. $9_n = p + 1$ and the mbt-function is always mbt_{p+1}.

Proposition 11 *For all odd n such that* $2P - 2p\text{-}d + 1 \leq n \leq 2P - 1$ *with* $p = d + 2 \geq 5$, *there is no (1,q)-type edge with* $q \leq d + 1$.

Proof: Suppose, v and u are neighbours in a MGG_n, where deg v = 1 and deg u $\leq$ d + 1. By Proposition 10 we know that v calls u in rounds 1 and $9_n = p + 1$. Hence, u is fully informed already before round p + 1, but this cannot happen before round $\lceil \log_2 n \rceil = p$, i.e., along an incident edge e, u calls one of its neighbours other than v in round p. None of them can be called earlier than in round 2. By Proposition 9 we can bound the number of vertices other than v, who eventually get u's item of information:
If p is the first usage of the according edge, then it is at most

$$mbt(2, \ldots, d, p) = 1 + 2P - 2^{p+1} - d + 2p+1-p < n - 1;$$

otherwise it is at most

$$mbt(2, \ldots, d+1, p) = 1 + 2P - 2p\text{-}d - 2p+1-p < n - 1.$$

Note that $p \notin \{2, \ldots, d+1\}$ because of the assumption $p = d + 2$. In any case, u's information will not be disseminated through the entire network. □

Proposition 12 ([Fer97]) *For all odd n such that* $2P - 2^p - d + 1 \leq n \leq 2P - 1$ *with* $p = d + 2 \geq 5$, *any vertex v of degree 2 has to communicate in rounds 1 and* $p + 1$.

Proof : Suppose v starts to broadcast in round 2 only. Then via the two incident edges, its item can reach at most mbt(2) and *mbt(3)* vertices, respectively, whereby v itself is counted twice. But

$$\begin{aligned} \text{mbt}(2) + mbt(3) - 1 &= 2 + 2p\text{-}1 + 2P\text{-}^2 - 1 \\ &= 2P - 2p\text{-}^2 + 1 < n \text{ vertices} \end{aligned}$$

because $p - d \geq p - 3$. Since this is not sufficient, one assertion is proved. In order to see the according result for round $p + 1$, consider the inverse scheme. □

Proposition 13 *Let n be odd with $2P - 2p\text{-}d + 1 \geq n \geq 2P - 1, p \geq d + 2 \geq 5$. If in round 1, there is a call between two vertices v and u both of degree 2, then in round 2, they have to call their other neighbours, v' and u', respectively, which both have to be of degree at least $d + 1$.*

Proof: (1) v and v' as well as u and u' have to communicate in round 2, and in at least one of the rounds $p + 1$ or p.
Assume that u can start broadcasting its item in round 1 to v and not earlier than in round 3 to u', thus reaching no more than $\text{mbt}(2) + mbt(3) = 2P - 2P\text{-}^2 + 2 < n$ vertices which is a contradiction. If u and u' would not communicate in one of the rounds $p + 1$ or p then the above situation appears in the inverse scheme.
Suppose for the rest of the proof, $\deg v' \geq d$.
(2) v' has to call one of its neighbours other than v during round p or $p + 1$.
As every vertex, v' becomes fully informed in round p or $p + 1$. Assume now, none of both rounds uses an edge between v' and one of its neighbours other than v. By considering the inverse scheme we then know that v' can get the items of information from at most $1 + mbt(3)$ vertices via v and u, and at most $mbt(3, \ldots, d + 1)$ vertices via its other neighbours. But

$$\begin{aligned} mbt(3, \ldots, d+1) + 1 + mbt(3) &= 1 + 2p\text{-}1 - 2p\text{-}d + 1 + 1 + 2P\text{-}^2 \\ &= 2P - 2p\text{-}d - 2P\text{-}^2 + 3 < n \end{aligned}$$

because $p - 2 > 2$, and this is again a contradiction.

Now, v's item can be forwarded from u and v' not earlier than beginning in rounds 2 and 3, respectively. But depending on whether there is a call between v and u in round $p + 1$ or not, Proposition 12,(1), and (2) imply that either u calls u' in round p and v' calls one of its neighbours other than v in round $p + 1$, or vice versa. Consequently, v's item can reach no more than $mbt(2, \overline{p + 1})$ or $mbt(2, p)$ vertices starting in u, and no more than $mbt(3, \ldots, d + 1, p)$ or $mbt(3, \ldots, d + 1, \overline{p + 1})$ vertices starting in v', respectively. But both

$$mbt(2, \overline{p + 1}) + mbt(3, \ldots, d + 1, p) \quad \text{and} \quad mbt(2, p) + mbt(3, \ldots, d + 1, \overline{p + 1})$$

equal

$$\left(1+2^{p-1}\right)+\left(1+2^{p-1}-2^{p-d}\right)-\left(2^0+2^1\right) \;=\; 2^p-2^{p-d}-1 \;<\; n-1 \quad ,$$

i.e. not all vertices besides v itself can be informed. Consequently, deg v' > *d*, and the proof for deg u' > *d* is analog. □

Theorem 3 *For all odd n such that* 2P - 2^{p-d} + 1 ::; *n* ::; 2P - 1 *with p* = *d* + 2 = 5, *we have G(n)* = 1P. 1

Proof: Let Vi and Vi be the set of all vertices of degree 1 and 2, respectively. Moreover, let V_::;d+i := {x E V : 3 ::; deg x ::; d + 1}, and let V_::d+2,. be the set of vertices of degree at least d + 1 which are not adjacent to a vertex of degree 1. Finally, let ***ni*** be the cardinality of the set ¼ for any i E ... {1;2;:::; d + 1;::::: d + 2,•}.

In the 1-port model, Proposition lü(b) implies that no two vertices of V_1 can have a common neighbour. By Proposition 11, all neighbours of vertices of Vi must have degree at least $d + 2$. Hence, there are n_1 vertices besides Vi U Vi U V_::;d+i U V_::d+2,., i.e. n = n_1 + n2 + *n::;d+l* + n_::d+2,. + n_1 which we use in the form

$$n_2 \;=\; n - 2n_1 - n_{\leq d+1} - n_{\geq d+2,\bullet} \; . \tag{1}$$

Accordingly, summation of all degrees yields

$$2G(n) \;\geq\; n_1 + 2n_2 + 3n_{\leq d+1} + (d+2)n_{\geq d+2,\bullet} + (d+2)n_1 \; . \tag{2}$$

Now we consider any vertex v of degree 2. By Proposition 12, in round 1 it has to call one of its neighbours, *u*, which itself can neither be of degree only 1 (Proposition 11) nor be adjacent to a vertex of degree 1 (Proposition lü(b)). Thus, if deg *u* = 3 then even u E V_::;d+i UV_::d+2,•. If otherwise deg u = 2, we are in the situation of Proposition 13 which says that in round 2, v calls its other neighbour, v', and degv' = $d + 1$. Assume, there is a vertex *w* of degree 1 adjacent to v'. By Proposition lO(b), *w* and v' communicate in rounds 1 and $p + 1$, i.e. *v'* can broadcast its own item to *w*, at most *mbt(4)* vertices via *v* and *u*, and at most *mbt(3, ... ,p)* other vertices. But this adds up to at most

$$1+\left(1+2^{p-1}-2^1\right)+\left(1+2^{p-3}\right) \;=\; 2^p-3\cdot 2^{p-3}+1 \;<\; n \; .$$

This contradiction shows that *v'* E V_::d+2,•.

Altogether we showed that assigning to any v E Vi, the uniquely determined first vertex of degree at least 3 it communicates with, always leads to vertices of V_::;d+i U V?:d+2,. whereby those of V_::;d+i or V_::d+2,. can appear at most once or twice, respectively. Hence, n2 ::; $n_{::;d+1}$ + 2n?:d+2,• or

$$n_{\leq d+1} \;\geq\; n_2 - 2n_{\geq d+2,\bullet} \; . \tag{3}$$

Putting (3) and (1) into (2) yields

$$2G(n) \quad \frac{5}{2}n + (d - 2)n_1 + (d - \frac{3}{2})n2d+2,. ,$$

and thus the assertion because d 3. □

3 Linear Cast Model

3.1 Compounding Method for the Linear Cost Model

First of all, we give here general upper bounds for $G_{ß,T}(n)$ when n is even, thanks to the use of Knödel graphs. Indeed, the upper bounds from [Fer97] given in Proposition 8 in the *unit cost* model turn out to be applicable to the *linear cost* model as well. Moreover, this Observation will be useful in the Proof of Theorem 4.

Observation 1 *For all even n, we have :*

$$G_{ß,T}(n) \leq \begin{cases} \frac{n(p-2)}{} & \text{if } 2P\text{-}1 + 2 \leq n \leq 3 \cdot 2P\text{-}^2 - 4 \\ \frac{n-(2-1)}{} & \text{if } 3.\ 2^p\text{-}1 - 2 \text{ :s; } n \text{ :s; } 2P - 2 \end{cases}$$

Proof: The first part of this Observation is derived from [FP94], where it was shown that the Knödel graph $W_{p-1,n}$ is Linear Gossip Graph for any even $2^p - 1 + 2$:s; n :s; 2P - 2.

The second part of the Observation was proved in the *unit cost* model in [Fer97], where it was shown that the Knödel graph $W_{p-2,n}$ is a Gossip Graph for any even $2^p - 1 + 2$:s; n :s; $3 \cdot 2P\text{-}^2$ - 4. However, it is easy to see that the proof still holds in the *linear cost* model. Indeed, the gossip scheme is the following : gossip along edges in dimension i - 1 for every round 1 :s; i :s; p - 2, then gossip again along dimension Oduring round p - 1, then along dimension p - 3 during round p. lt is easy to see that, during each round, the vertices respect the properties of an Optimal Gossip Algorithm in the *linear cost* model, as stated in [FP94]. Indeed, the first (p - 2) rounds take time $t_1 = (p - 2)ß + (2P\text{-}^2 - 1)T$, while round p - 1 takes $t_2 = \beta + (2P\text{-}^2 - 2)T$, and round p takes $t_3 = \beta + n - (2P\text{-}1 - 2)T$. Hence the total gossip time is $t = pß + (n - 1)T$, and $W_{p-2,n}$ is a Linear Gossip Graph for every $2^p - 1 + 2$:S:n :s; $3 \cdot 2P\text{-}^2 - 4$. □

In [FP94], Fraigniaud and Peters gave a compounding method to get Linear Gossip Graphs from existing (minimum) Linear Gossip Graphs. However, their method differs from ours, since in their case they take a $MLGG_k$, and replace each vertex by a copy of a $MLGG_n$, and each edge linking two vertices by a perfect matching between two copies of a $MLGG_n$. Here, we present a method similar in all points to the method proposed in Theorem 1 in the *unit cost* model, which turns out to give better results than the compounding method from [FP94].

Theorem 4 (Cornpounding in the Linear Cost Model) For all k = 2p-l - 1 and evenn such that $\lfloor \log_2(kn) \rfloor = \lfloor \log_2(k) \rfloor + \lfloor \log_2(n) \rfloor$, $G_{ß,T}(kn) \leq kG_{ß,T}(n) + ? \cdot (G_{ß,T}(2k) - k)$.

Proof: In order to prove the Theorem, we need, as in the unit cost model, to start from a $MLGG_{2k}$ (that is a MLGG of order 2k = 2P - 2) which is compoundable. However, by Observation 1, we know that $W_{p-1,2k}$ is a $MLLG_{2k}$. For this, we use the following gossip scheme : let the vertices communicate along dimension i - 1 during every round $1 \leq i \leq p - 1$, and vertices communicate again along dimension Oduring round p. Hence, $W_{p-1,2k}$ is clearly compoundable, and for our purpose, we will use the perfect matching PM_2 induced by the communications which take place during round 2, that is the perfect matching corresponding to dimension 1 in the graph.

In that case, let us construct a graph of order nk the same way as in the unit cost model : we replace each edge (and its adjacent vertices) of the perfect matching PM_2 by a copy of a $MLGG_n$. In each of these copies G_i, we split the vertices in two subsets of equal cardinality, $S_{i,1}$ and $S_{i,2}$. Then, each of these $S_{i,j}$ will play the role of what was previously a single vertex in the $MLGG_{2k}$. More precisely, if two vertices u and v were neighbours in $W_{p-1,2k}$, then we add a perfect matching between the corresponding $S_{i,j}$ and $S_{i',j'}$.

Now the gossip scheme will be as follows: gossip along what was previously dimension 0, then gossip independently in each copy G_i of a $MLGG_n$ (during time units 2 to $\lfloor \log_2(n) \rfloor + 1$), and gossip from time units $\lfloor \log_2(n) \rfloor + 2$ to $\lfloor \log_2(k) \rfloor + \lfloor \log_2(n) \rfloor$ the same way as in $W_{p-1,2k}$. We then see, by the same argument as in the unit cost model, every vertex will be informed of all the pieces of information of the other vertices within $\lfloor \log_2(kn) \rfloor$ rounds. However, we still have to show that it takes no more than nk - 1 steps to achieve this.

Since each vertex starts with a unique piece of information of length 1, the first round takes time $t_1 = ß + \tau$. Then, each vertex knows two pieces of information, and will gossip independently in its own copy of a $MLGG_n$. Hence, this "internal" gossip takes time $t_n = \lfloor \log_2(n) \rfloor ß + 2(n-1)T$. After this, each vertex knows 2n pieces of information, and the gossip goes on during $\lfloor \log_2(k) \rfloor - 1$ more rounds, as it did in $W_{p-1,2k}$. The only difference, as stated above, is that each vertex knows 2n pieces of information instead of 1. Moreover, except for the very last round, there is no overlap, that is every pair of vertices which communicate docs not havc any piccc of information in common. Hcncc, during thc $\lfloor \log_2(k) \rfloor - 2$ first rounds (among the $\lfloor \log_2(k) \rfloor - 1$ remaining), the time to exchange information will be : $ß + 2nT$, $ß + 4nT$, $ß + 8nT$, ..., $ß + 2^{\lfloor \log_2(k) \rfloor - 2} nT$. During the very last round, every pair of vertices has n pieces of information in common (since they have already exchanged information at round 1, and since the gossip in each G_i begins just after round 1). Hence, the time needed for the last round is $t_l = ß + (2^{\lfloor \log_2(k) \rfloor - 1} - 1)nT$. Summing all the time units needed for each round, we get a total time of $t = t_1 + t_n + (I : [\_ f^2(k) \rfloor - 2 ß + 2^i nT) + t_i$. Standard calculations then give us $t = (\lfloor \log_2(n) \rfloor + \lfloor \log_2(k) \rfloor) ß + (n \cdot (2^{\lfloor \log_2(k) \rfloor} - 1) - 1)T$. However, we know by hypothesis that $\lfloor \log_2(n) \rfloor + \lfloor \log_2(k) \rfloor = \lfloor \log_2(kn) \rfloor$, and that $k = 2p-1 - 1$, hence we have $t = \lfloor \log_2(kn) \rfloor ß + (nk - 1)T$. Consequently, the graph we build by this method is able to gossip in the linear cost model in minimum time. Hence, this is a linear gossip graph. Since this construction gives us graphs of the same size as in the unit cost model, we directly get $G_{ß,T}(kn) \leq kG_{ß,T}(n) + \% \bullet (G_{ß,T}(2k) - k)$.

Thanks to the previous method, we obtain for the first time, as for the unit cost model, infinitely many Linear Gossip Graphs for which their number of edges does not exceed -(llog $_2$(n)l - 3) edges. The proofrelies exactly on the same arguments as for Proposition 6, since the Knödel graph $W_{2k,p-s}$ is a gossip graph as well as a linear gossip graph, and gossiping can be achieved in both cases using the same gossip scheme [Lab93, FP94]. This is the purpose of the following Observation.

Observation 2 *For all p ≥ 7 and* n' = 24 · (2P-^{5} - 1), $G_{ß,T}(n') \leq n' + \frac{n'}{3}$.

Also, thanks to Theorem 4, it is possible to determine the exact value of Gß,T(72).

Theorem 5 Gß,T(72) = 144.

Proof: The upper bound is given by Observation 2, where $p = 7$, that is k = 3. Moreover, we know by Theorem 2.17 of [FP94] that a vertex of degree 3 can know only up to 66 pieces of information after 7 rounds. Since $g_{72} = 7$, it follows that there is no vertex of degree less than or equal to 3 in a $MLGG_{72}$. Hence Gß,T(72) = 144. Since the upper and lower bound coincide, we get the result.

3.2 Summary of the Results (Linear Cost)

Table 2 presents the results given by the k-way split method and Observation 1 for even n with 18 ≤ n ≤ 128. Note that for the values n = 2P, n = 2P - 2, n = 2P - 4 and n = 2P - 6, the result is optimal [FP94]. For n = 2P, $G_{ß,T}(n) = P$;, and for n = 2P - 2, n = 2P - 4, and n = 2P - 6, $G_{ß,T}(n) = (p-)n$. The optimality for $G_{ß,T}(n)$ is indicated by an asterisk (*).

The "Comments" column indicates how these bounds have been obtained, and the "Formerly" column is taken from [FP94].

4 Conclusion

In this paper, we have presented a general compounding method which gives upper bounds for G(kn) and $G_{ß,T}(kn)$ for even n. Moreover, in the unit cost model, it is possible in some cases to use variants of the general method, which are applicable for more (even) values. Thanks to these methods, some upper bounds can also be derived for G(n) when n is odd, still in the unit cost model. All these results, together with the ones of Proposition 8 and Observation 1, give the best known upper bounds for G(n) (resp. $G_{ß,T}(n)$), either matching or improving the upper bounds given in [Fer97] and [FP94]. It is also interesting to note that these improvements can in turn be taken as entries for further values of upper bounds for G(n), and that the recursion can obviously be applied several times. In a word, any improvement in the knowledge of G(n) (resp. $G_{ß,T}(n)$), whether by our method or by any other, will help to improve the upper bounds on further values of G(n) (resp. $G_{ß,T}(n)$).

n	$G(n)$	Formerly	Comments	n	$G(n)$	Formerly	Comments
18	27*	27*	[FP94]	74	185	222	$W_{s,74}$
20	30*	30*	[FP94]	76	190	228	$W_{s,16}$
22	44	44	$W_{4,22}$	78	195	234	$W_{s,1s}$
24	36*	36*	[FP94]	80	200	240	$W_{s,so}$
26	52*	52*	$w_{4,26}$	82	205	246	$W_{s,s2}$
28	56*	56*	[FP94]	84	210	252	$W_{s,s4}$
30	60*	60*	[FP94]	86	215	258	$W_{s,s6}$
32	80*	80*	[FP94]	88	220	264	$W_{s,ss}$
34	68	85	$w_{4,34}$	90	225	270	$W_{s,9o}$
36	72	90	$w_{4,36}$	92	230	276	$W_{s,92}$
38	76	95	$w_{4,3s}$	94	282	282	$w_{6,94}$
40	80	100	$w_{4,4o}$	96	240	240	2-way [48-48]
42	84*	84*	[FP94]	98	294	294	$w_{6,9s}$
44	88*	88*	[FP94]	100	300	300	$w_{6,100}$
46	115	115	$W_{s,46}$	102	306	306	$W_{5,102}$
48	96	96	2-way [24-24]	104	312	312	$w_{6,104}$
50	125	125	$W_{s,so}$	106	318	318	$w_{6,106}$
52	130	130	$W_{s,s2}$	108	324	324	$w_{6,10s}$
54	135	135	$W_{s,54}$	110	330	330	$w_{6,110}$
56	140	140	$W_{s,56}$	112	336	336	$W_{5,112}$
58	145*	145*	[FP94]	114	342	342	$w_{6,114}$
60	150*	150*	[FP94]	116	348	348	$w_{6,116}$
62	155*	155*	[FP94]	118	354	354	$w_{6,us}$
64	192*	192*	[FP94]	120	360	360	$w_{6,120}$
66	165	198	$W_{s,66}$	122	366*	366*	[FP94]
68	170	204	$W_{s,6s}$	124	372*	372*	[FP94]
70	175	210	$W_{s,10}$	126	378*	378*	[FP94]
72	**144***	**144***	3-way	128	448*	448*	[FP94]

Table 2: Upper bounds for $G_{\beta,r(n)}$ (n even, 18:::; n:::; 128)

We also have proved that, for infinitely many n, there exists (Linear) Gossip Graphs with ?·(j$\log_2$(n)l - 3) (resp. ?·(j$\log_2$(n)l - 4) in the *unit* costmodel only) edges, something which was unknown before. The best result, formerly, was •(l$\log_2$(n)l - 2), thanks to the Knödel graph $W_{n,r\log_2(n)l-2}$ (cf. Proposition 8 and Observation 1).

Though these methods have the same flavour as Farley's k-way split method concerning broadcasting, it is surprising that they had never been proved to be efficient for gossiping.

In addition to these general upper bounds results, we also gave some small improvements on certain lower bounds for $G(n)$, which were derived from a method used in [Fer97].

References

[BFP95] J.C. Bermond, P. Fraigniaud, and J.G. Peters. Antepenultimate broadcasting. *Networks,* 26:125-137, 1995.

[CL85] S.C. Chau and A.L. Liestman. Constructing minimal broadcast networks. *J. Combin. Inform. Systems Sei.,* 10:110-122, 1985.

[Far79] A. Farley. Minimalbroadcast networks. *Networks,* 9:313-332, 1979.

[Fer97] G. Fertin. A study of minimum gossip graphs. Technical Report RR-1172-97, Laboratoire Bordelais de Recherche en Informatique, 1997. Submitted.

[FP94] P. Fraigniaud and J.G. Peters. Minimum linear gossip graphs and maximal linear (6., k)-gossip graphs. Technical Report CMPT TR 94-06, Simon Fraser University, Burnaby, B.C., 1994. Available at **http:/** /fas.sfu.ca/**pub/** cs/techreports/1994/.

[Knö75] W. Knödel. New gossips and telephones. *Discrete Mathematics,* 13:95, 1975.

[Lab93] R. Labahn. Some minimum gossip graphs. *Networks,* 23:333-341, 1993.

[Pah97] H-C. Pahlig. Approximative Algorithmen zur Konstruktion minimaler Gossip-graphen. Diplomarbeit, Universität Rostock - Fachbereich Mathematik, February 1997.